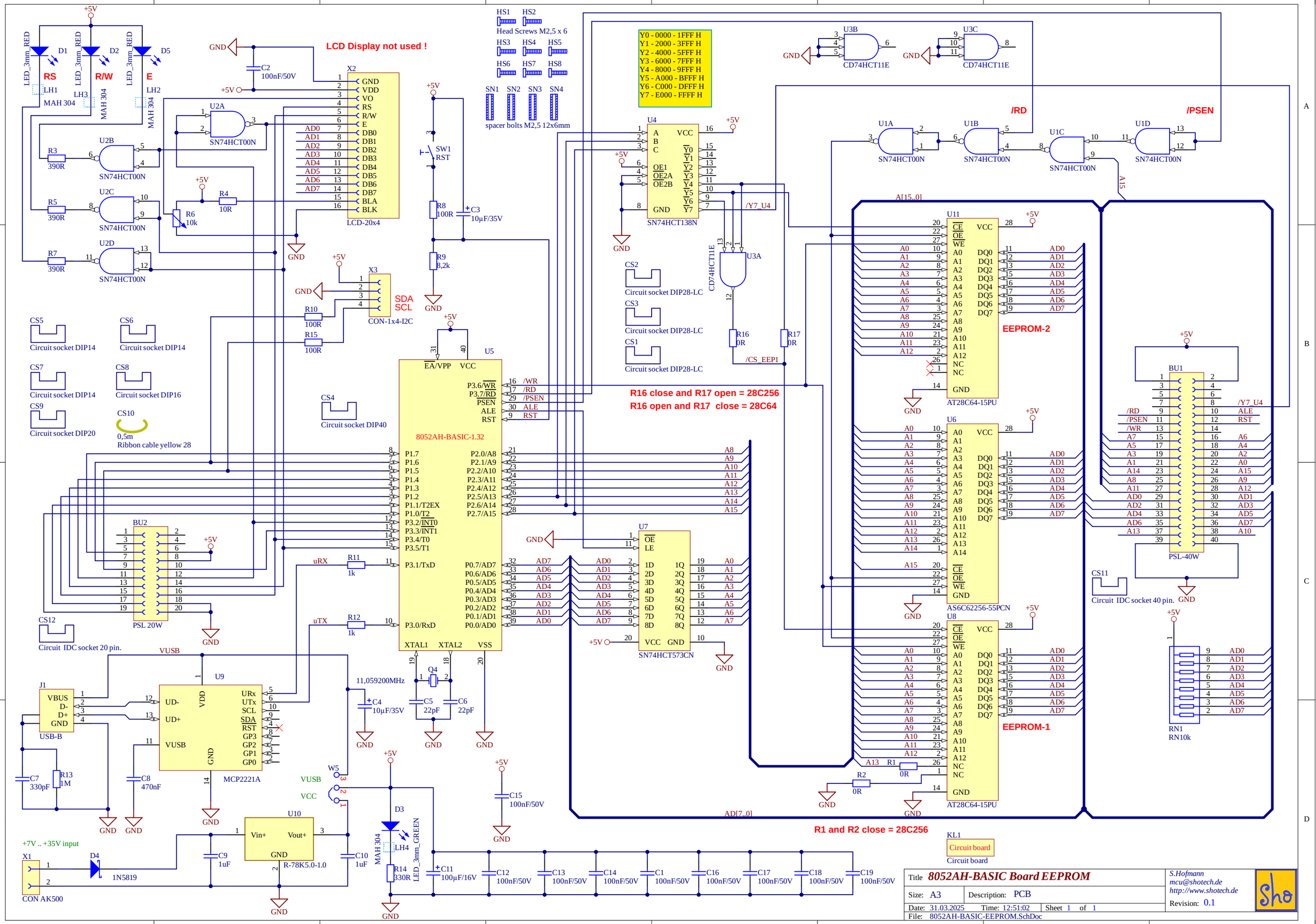
LCD Display not used !
RS
R/W
E
LCD-20x4
SDA
SCL
CON-1x4-I2C
8052AH-BASIC-1.32
SN74HCT138N
SN74HCT573CN
SN74HCT00N
CD74HCT11E
/RD
/PSEN
EEPROM-2
EEPROM-1
AT28C64-15PU
AS6C62256-55PCN
PSL-40W
PSL 20W
USB-B
MCP2221A
R-78K5.0-1.0
CON AK500
+7V .. +35V input
R16 close and R17 open = 28C256
R16 open and R17 close = 28C64
R1 and R2 close = 28C256
Y0 - 0000 - 1FFF H
Y1 - 2000 - 3FFF H
Y2 - 4000 - 5FFF H
Y3 - 6000 - 7FFF H
Y4 - 8000 - 9FFF H
Y5 - A000 - BFFF H
Y6 - C000 - DFFF H
Y7 - E000 - FFFF H
Head Screws M2,5 x 6
spacer bolts M2,5 12x6mm
Circuit board
Circuit IDC socket 40 pin.
Circuit IDC socket 20 pin.
Circuit socket DIP14
Circuit socket DIP16
Circuit socket DIP20
Circuit socket DIP40
Circuit socket DIP28-LC
Ribbon cable yellow 28
Title 8052AH-BASIC Board EEPROM
Size: A3
Description: PCB
Date: 31.03.2025
Time: 12:51:02
Sheet 1 of 1
File: 8052AH-BASIC-EEPROM.SchDoc
S.Hofmann
mcu@shotech.de
http://www.shotech.de
Revision: 0.1

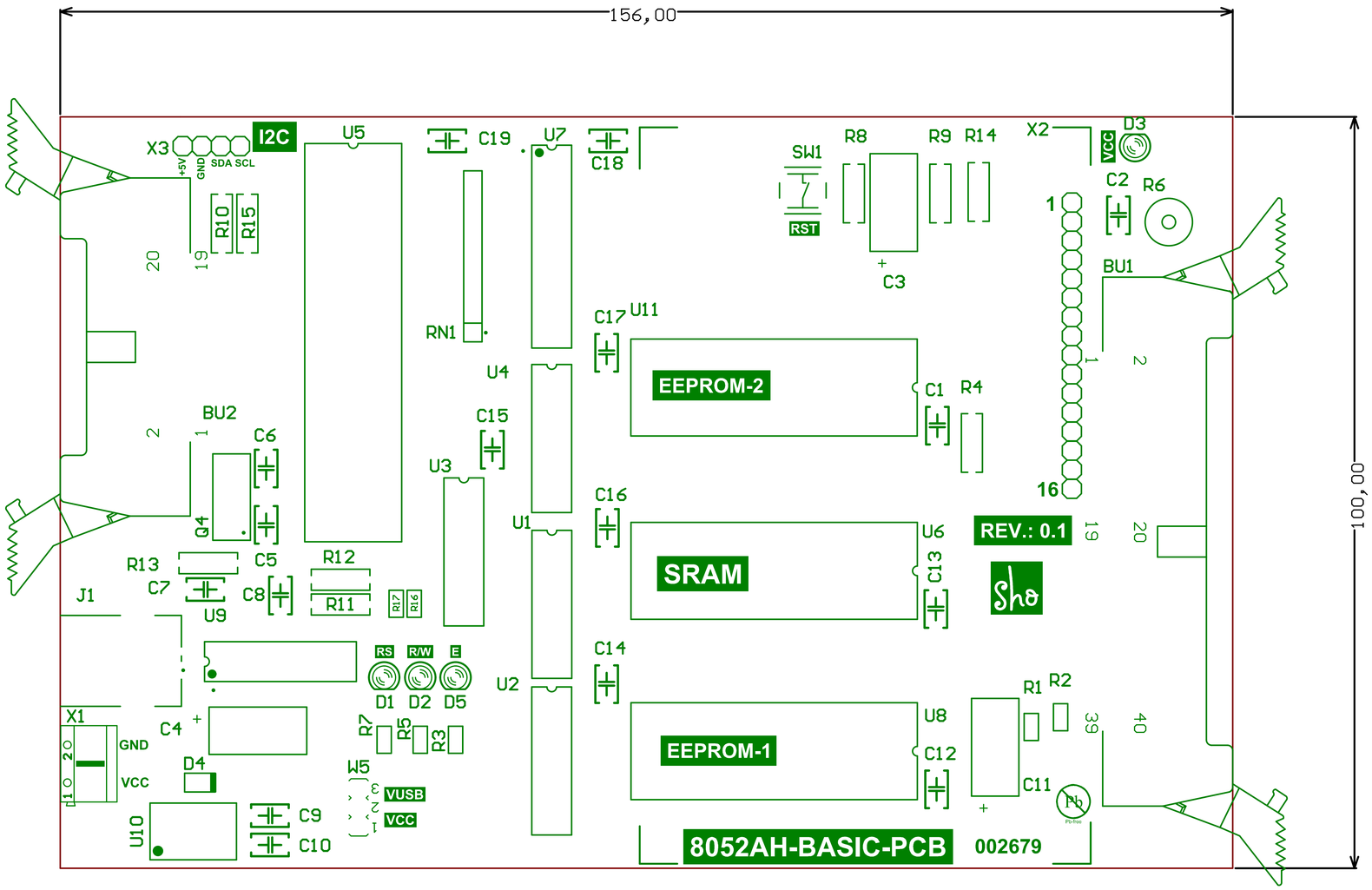
156,00
100,00
I2C
X3
+5V
GND
SDA SCL
R10
R15
U5
C19
U7
C18
SW1
RST
R8
R9
R14
X2
D3
VCC
C2
R6
BU1
C3
RN1
C17
U11
EEPROM-2
C1
R4
U4
C15
U3
BU2
C6
Q4
C5
R13
C7
C8
R12
R11
R17
R16
U9
J1
U1
C16
U6
SRAM
C13
REV.: 0.1
RS
R/W
E
D1
D2
D5
U2
C14
U8
EEPROM-1
C12
R1
R2
C11
X1
GND
VCC
C4
D4
R7
R5
R3
W5
VUSB
VCC
U10
C9
C10
8052AH-BASIC-PCB
002679

Bearbeiter: S. Hofmann
Tel: 040 /
Fax. 040 / 76906856
Email: shop@shotech.de

Bill of Materials

Datum:	31. März 2025
Zeit:	12:51:38
Variant:	None
Bezeichnung:	8052AH-BASIC Board EEPROM
Revision:	0.1
Description:	PCB

Quantity	Designator	Footprint	Bemerkung	Value	MFT	Order-Code	Second-source	shotech
1	BU1	IDC2.54-H40A - duplicate	SEK-18 SV MA STD ANG29 RKZ 40P PL3	09 18 540 7903	Harting	09 18 540 7903	PSL-40W	
1	BU2	IDC2.54-H20A	SEK-18 SV MA STD ANG29 RKZ 20P PL3	PSL 20W	Harting	09 18 520 7913	Reichelt - PSL 20W	
10	C16, C17, C18, C19	CAP_Radial_5MM	100nF/50V/±10%/X7R/RM 5.08	100nF/50V	Vishay / BC Components	K104K15X7RF53H5	C322C104K5R5TA - shotech	1347
2	C3, C4	CAPPA6.3mm x 13mm	Elko axial 100µF 16V 6,3x13mm +85°C	10µF/35V	SUNTAN	TS13AE1V100MSB000R		
2	C5, C6	CAP_Radial_5MM	Ker-Ko 22pF 50V RM5,00 5% NPO/COG	22pF	TDK	FG28C0G1H220JNT06	FG28C0G1H220JNT00	2387
1	C7	CAP_Radial_5MM	C0G +/-5% LS=5mm	330pF	TDK	FG26C0G2J331JNT06	3D06B331KL52N : Richwell	2396
1	C8	CAP_Radial_5MM	Vs-Kond 470nF 63V Z5U RM5	470nF	KEMET	C322C474M5U5TA	KEMET	1751
2	C9, C10	CAP_Radial_5MM	CAP CER 1UF 50V X7R RADIAL	1uF	KEMET	C330C105M5R5CA7303		1414
1	C11	CAPPA6.3mm x 13mm	Elko axial 100µF 16V 6,3x13mm +85°C	100µF/16V	SUNTAN	TS13AE1C101MSB000R		
3	CS1, CS2, CS3		Circuit socket DIP28-LC	Circuit socket DIP28-LC	ASS	A 28-LC-TT		1521
1	CS4		Circuit socket DIP40	Circuit socket DIP40	ASS	A 40-LC-TT		1582
3	CS5, CS6, CS7		Circuit socket DIP14 präzision	Circuit socket DIP14	PRECIDIP	110-87-314-41-001101		2065
1	CS8		Circuit socket DIP16 präzision	Circuit socket DIP16	ASS	AR16-HZL-TT		2066
1	CS9		Circuit socket DIP20 präzision	Circuit socket DIP20	ASS	AR 20 HZL-TT		2067
1	CS10		Ribbon cable yellow 28	Ribbon cable yellow 28	shotech			2398
1	CS11		Circuit IDC socket 40 pin.	pin.	free	PFL 40		
1	CS12		Circuit IDC socket 20 pin.	pin.	free	PFL 20		
3	D1, D2, D5	LED3MM - RED		LED_3mm	frei			
1	D3	LED3MM	LED diffus grün 50mcd 60° 3mm	LED_3mm_GREEN	Everlight	204-10SYGD/S530-E2		1323
1	D4	DO41	Schottky Dioden & Gleichrichter 1.0A 40V	1N5819	Taiwan Semiconductor	1N5819 R0		1568
8	HS7, HS8		Head Screws M2,5 x 6	Head Screws M2,5 x 6	TR FASTENINGS			2101
1	J1	CON-A-USBSB	USB-Buchse B print 90°	USB-B	Assmann WSW	A-USBSB		1618
1	KL1		Circuit board	Circuit board	frei			2397
4	LH1, LH2, LH3, LH4		LED 3mm Abstandshalter 4mm	MAH 304	Fischer Elektronik	MAH 304		2366
1	Q4	HC49/4H_SMX	Quarze +/-30ppm, 20pF, 40Ohm, 11,059200MHZ FUNDAMENTAL	11,059200MHz	HKC Europe	9SM1105920E20F3FZ000		1320
4	R1, R2, R16, R17	RES6.5-3.4X1.9	Metallsch. 0204 1/4W 1%	0R	frei	frei		
3	R3, R5, R7	RES6.5-3.4X1.9	Metallsch. 0204 1/4W 1%	390R	frei	frei		
1	R4	RES10-7.8X2.8 - 10k	WIDERSTAND, 207, axial, 1%	10R	frei	RMGK010		
1	R6	PT6KV	10k Trimmer	10k	Piher	PT6KV-103A2020		
3	R8, R10, R15	RES10-7.8X2.8	WIDERSTAND, 207, 1%	100R				1678
1	R9	RES10-7.8X2.8	Metallsch. 0207 1/4W 1% 1K5 lose	8,2k		RMK001.5		
2	R11, R12	RES10-7.8X2.8 - 1k	Metallsch. 0207 1/4W 1%	1k	frei	RMGK001		1235
1	R13	RES10-7.8X2.8	WIDERSTAND, 207, 1%	1M				1668
1	R14	RES10-7.8X2.8 - 330R	WIDERSTAND, 207, axial, 1%	330R				1588
1	RN1	SIP240W50P254L2276H508Q9P	Widerstandnetzwerke u. -Arrays 9pins 10Kohms Bussed	RN10k	Bourns	4609X-101-103LF		
4	SN1, SN2, SN3, SN4		spacer bolts Polyamid M2,5 12mmx6mm,	12x6mm	frei			
1	SW1	SW-DTS-644	Mini-Taster print stehend 1N	DTS-644N-V	Diptronics	DTS-644N-V		2455
2	U1, U2	N014	Quadruple 2-Input Positive-NAND Gate	SN74HCT00N	Texsas Instruments	SN74HCT00N		
1	U3	N014	Triple 3-Input Positive-AND Gate	CD74HCT11E	TI	CD74HCT11E		
1	U4	N016	3-Line to 8-Line Decoder / Demultiplexer	SN74HCT138N	TI	SN74HCT138N		
1	U5	SOT129-1	8052 mit BASIC ROM 8KB, DIP40, 5V	8052AH-BASIC	Intel	8052AH-BASIC	+	2403
1	U6	PDIP28	SRAM LLPow as 5V 32kx8 55ns DIP28	AS6C62256-55PCN	Alliance	AS6C62256-55PCN		
1	U7	N0020A	Octal D-Type Latch, 3-State, 4,5 ... 5,5 V, DIL-20	SN74HCT573CN	TI	SN74HCT573CN		
2	U8, U11	PDIP28	EEPROM 64K 8K x 8 150 ns 4.5V-5.5V	AT28C64-15PU	Microchip Technology / Atmel	AT28C64-15PU		
1	U9	DIP-14	USB 2.0 to I^2C/UART Protocol Converter with GPIO , PDIP-14	MCP2221A	Microchip	MCP2221A-I/P		1596
1	U10	R-78K	DC/DC Conv SIP3 6,5-36V 5V 1A	R-78K5.0-1.0	Recom	R-78K5.0-1.0		
1	W5	JP2	Jumper 3pin	Jumper 3pin	frei	frei		1564
1	X1	AK500/2	AR-Klemmen 250V 2pol grau	ARK500/2	PTR-Messtechnik	AK500/2DS-5,0-V/GRAU		1576
1	X2	LCD 16 x 4 Backl	LCD Display 20 x 4 mit Backl. u. Buchse	LCD-16x4			LCD-16x4	
1	X3	1X4						
91								